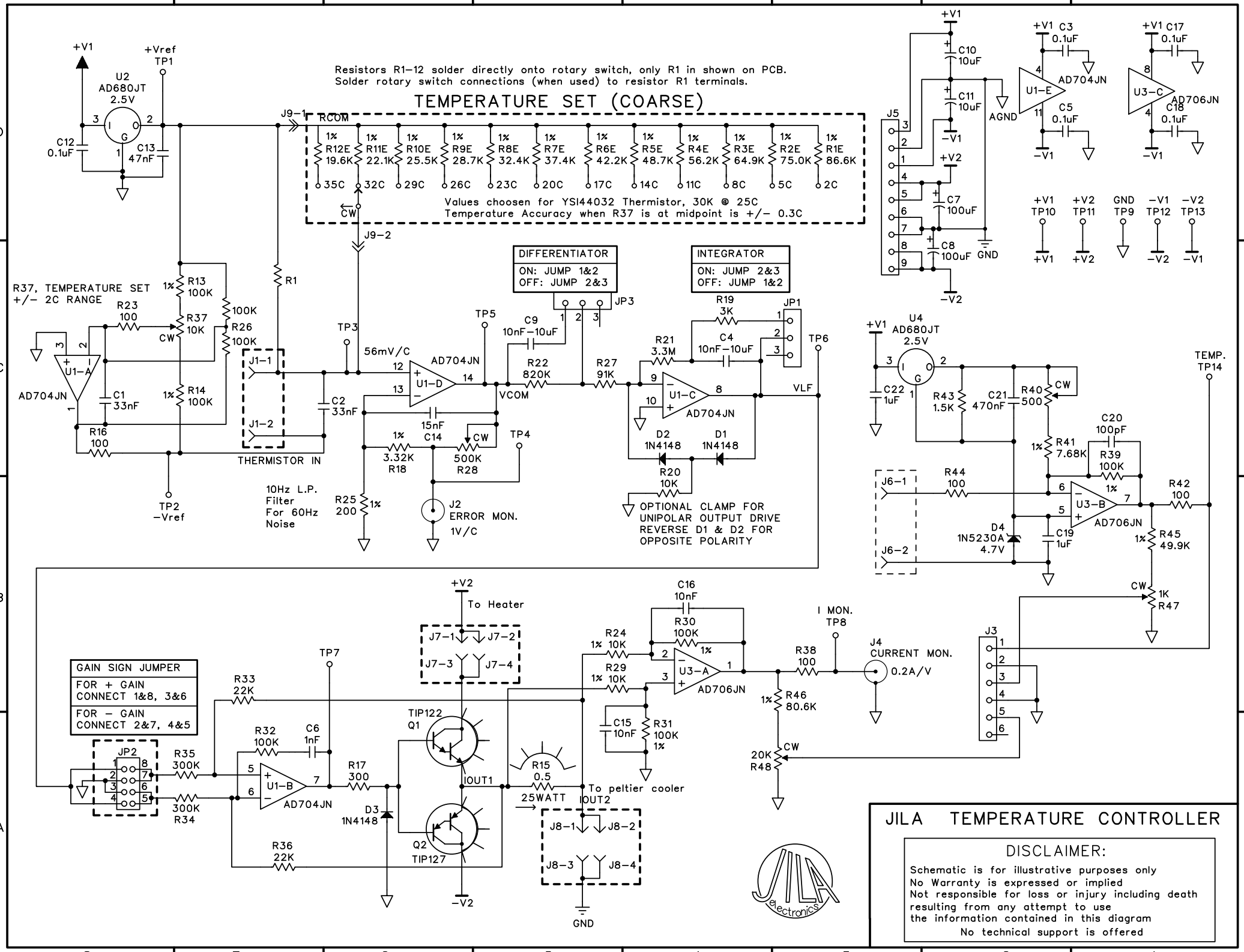
TEMPERATURE SET (COARSE)
Resistors R1–12 solder directly onto rotary switch, only R1 in shown on PCB.
Solder rotary switch connections (when used) to resistor R1 terminals.
Values choosen for YSI44032 Thermistor, 30K @ 25C
Temperature Accuracy when R37 is at midpoint is +/– 0.3C
R12E 19.6K 35C
R11E 22.1K 32C
R10E 25.5K 29C
R9E 28.7K 26C
R8E 32.4K 23C
R7E 37.4K 20C
R6E 42.2K 17C
R5E 48.7K 14C
R4E 56.2K 11C
R3E 64.9K 8C
R2E 75.0K 5C
R1E 86.6K 2C
RCOM
R37, TEMPERATURE SET
+/– 2C RANGE
R37 10K
R13 100K
R14 100K
R26 100K
R23 100
R16 100
C1 33nF
C2 33nF
C12 0.1uF
C13 47nF
U2 AD680JT 2.5V
+V1
+Vref TP1
TP2 –Vref
THERMISTOR IN
J1–1
J1–2
56mV/C
AD704JN
U1–A
U1–D
U1–C
U1–B
TP3
TP4
TP5
TP6
VCOM
VLF
R22 820K
R27 91K
C9 10nF–10uF
C14 15nF
R18 3.32K
R28 500K
R25 200
J2 ERROR MON. 1V/C
10Hz L.P. Filter For 60Hz Noise
DIFFERENTIATOR
ON: JUMP 1&2
OFF: JUMP 2&3
JP3
INTEGRATOR
ON: JUMP 2&3
OFF: JUMP 1&2
JP1
R19 3K
C4 10nF–10uF
R21 3.3M
D2 1N4148
D1 1N4148
R20 10K
OPTIONAL CLAMP FOR UNIPOLAR OUTPUT DRIVE
REVERSE D1 & D2 FOR OPPOSITE POLARITY
U4 AD680JT 2.5V
C22 1uF
R43 1.5K
C21 470nF
R40 500
R41 7.68K
C20 100pF
R39 100K
R44 100
R42 100
R45 49.9K
R47 1K
D4 1N5230A 4.7V
C19 1uF
U3–B
AD706JN
J6–1
J6–2
TEMP. TP14
J3
J5
C10 10uF
C11 10uF
C7 100uF
C8 100uF
+V2
–V2
AGND
GND
C3 0.1uF
C5 0.1uF
U1–E
C17 0.1uF
C18 0.1uF
U3–C
+V1 TP10
+V2 TP11
GND TP9
–V1 TP12
–V2 TP13
GAIN SIGN JUMPER
FOR + GAIN
CONNECT 1&8, 3&6
FOR – GAIN
CONNECT 2&7, 4&5
JP2
R33 22K
R32 100K
C6 1nF
R35 300K
R34 300K
R36 22K
R17 300
D3 1N4148
TIP122 Q1
Q2 TIP127
IOUT1
IOUT2
R15 0.5 25WATT
To Heater
J7–1
J7–2
J7–3
J7–4
To peltier cooler
J8–1
J8–2
J8–3
J8–4
R24 10K
R29 10K
C16 10nF
R30 100K
U3–A
AD706JN
C15 10nF
R31 100K
R38 100
I MON. TP8
J4 CURRENT MON. 0.2A/V
R46 80.6K
20K R48
JILA TEMPERATURE CONTROLLER
DISCLAIMER:
Schematic is for illustrative purposes only
No Warranty is expressed or implied
Not responsible for loss or injury including death
resulting from any attempt to use
the information contained in this diagram
No technical support is offered
JILA electronics